The MC5600 MultiChannel Array Gauge

SolveTech, Inc.

Agenda

- About SolveTech
- How It Works
- About the MultiChannel Array Gauge
- See It Work
- Data Collection
- Summary

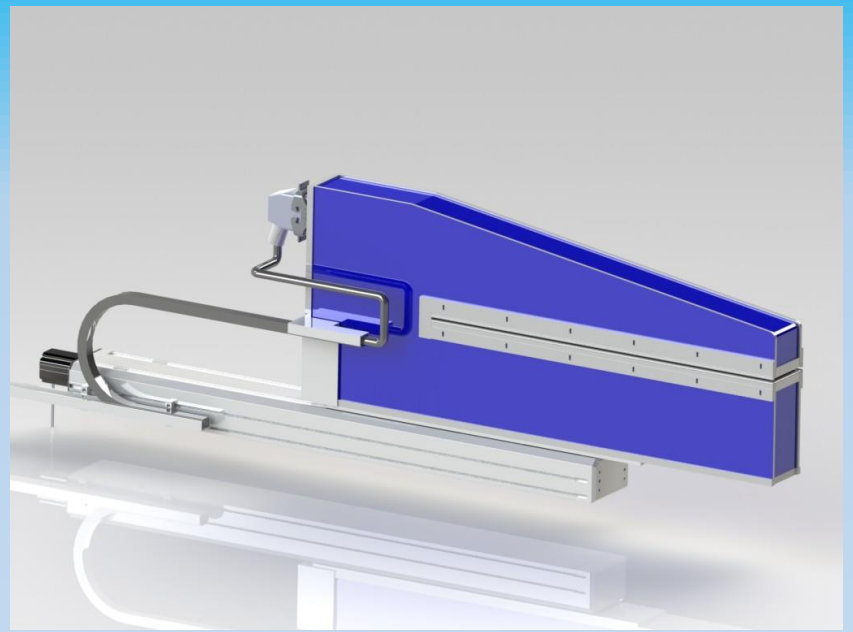

About SolveTech

- Founded in 1981 by Doug Lawrence
- Headquarters and Manufacturing in Wilmington, DE
- Focuses on capacitance gauging technology- On line and in the lab
- Very responsive to customers- attitude of service and providing value.
- Can custom engineer solutions

Our Technology

- Non Contact Capacitance Thickness Gauging System
  - Measures material thickness using an electric field without contact
- Proprietary Technology with Market Leading Performance
- No Nuclear Radiation or X-Rays = No Regulatory Headaches
- Customizable to Material Needs
- Industrially Durable
  - 25+ year life!
- Refined over 34 years of constant development

SolveTech INC

How It Works

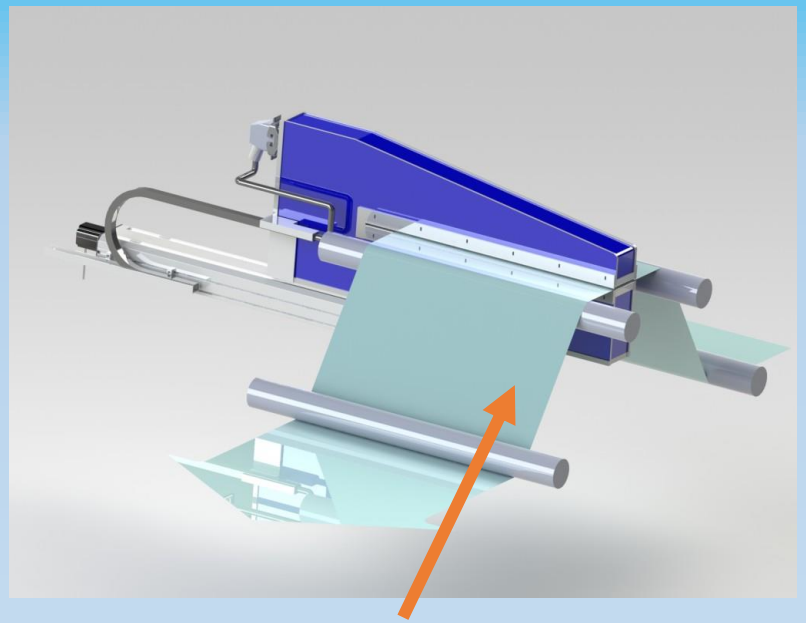

Film travels through the stationary C- Channel gauge head with multiple measurement zones.

Each Measurement Channel

MEASUREMENT PRINCIPLE: GENERAL THEORY

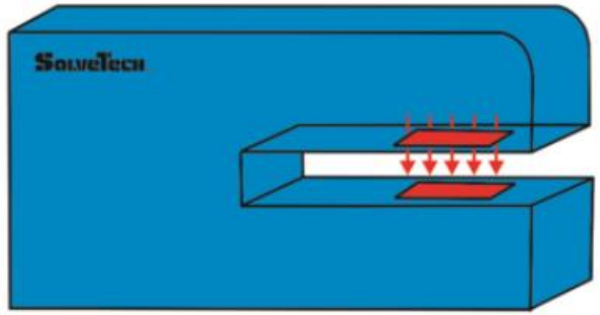

Figure 1
Simplified Measurement Head (Single Channel)showing an electric field between two measurement electrodes

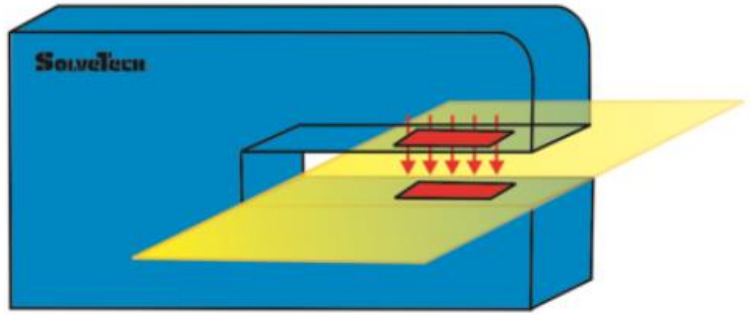

Figure 2
When a material is placed in the gap, it will respond to the electric field. The gauge contains a circuitry which is sensitive to this response.

SolveTech INC

About the MC5600

- Highly accurate, repeatable and stable- Best on the market in all of these categories
- Provides continuous cross web and down web data at the same time
- Great for narrow webs less than 60 inches
- Can be used for wider webs that don’t require continuous coverage.

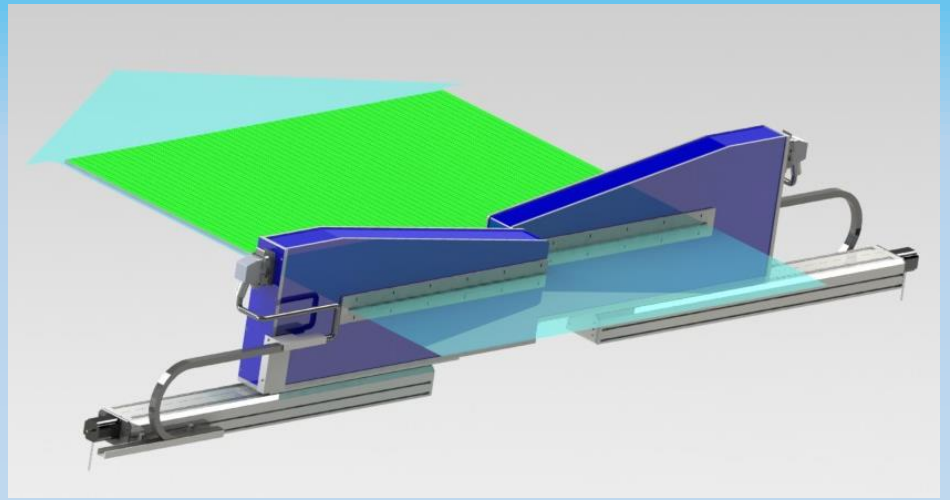

SolveTech INC

The MC5600

- The unit zeros itself at a user defined interval
- Can pull offline for startup
- Simply press a button to put the gauge on line by setting up limit switches or edge detection

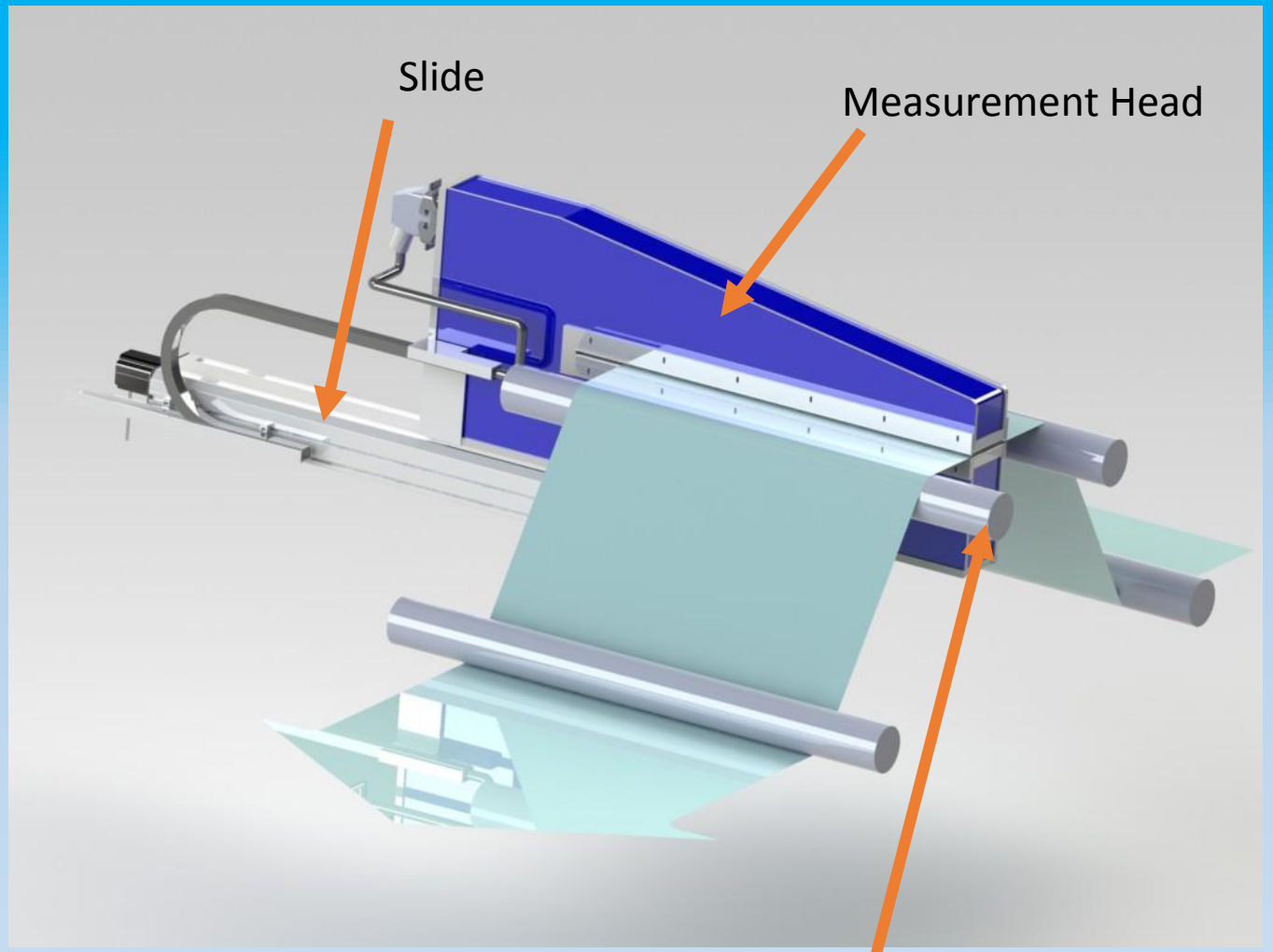

SolveTech INC

Calibration and Recipes

- Each material will respond to the electric field differently
- Therefore, we need to calibrate for each formulation and create a recipe.
- Once a recipe is created, this calibration can be used again and again for a given material.
- 4 Methods:
  - Gauge by Weight- Most Accurate- Required for thin films
  - Calipers- Quick and fairly accurate
  - Reference Frame- For customers who run one material
  - Run in %Plus mode- See % variability without calibrating

The MultiChannel Doesn't Scan

- Continuous Coverage for a True Profile

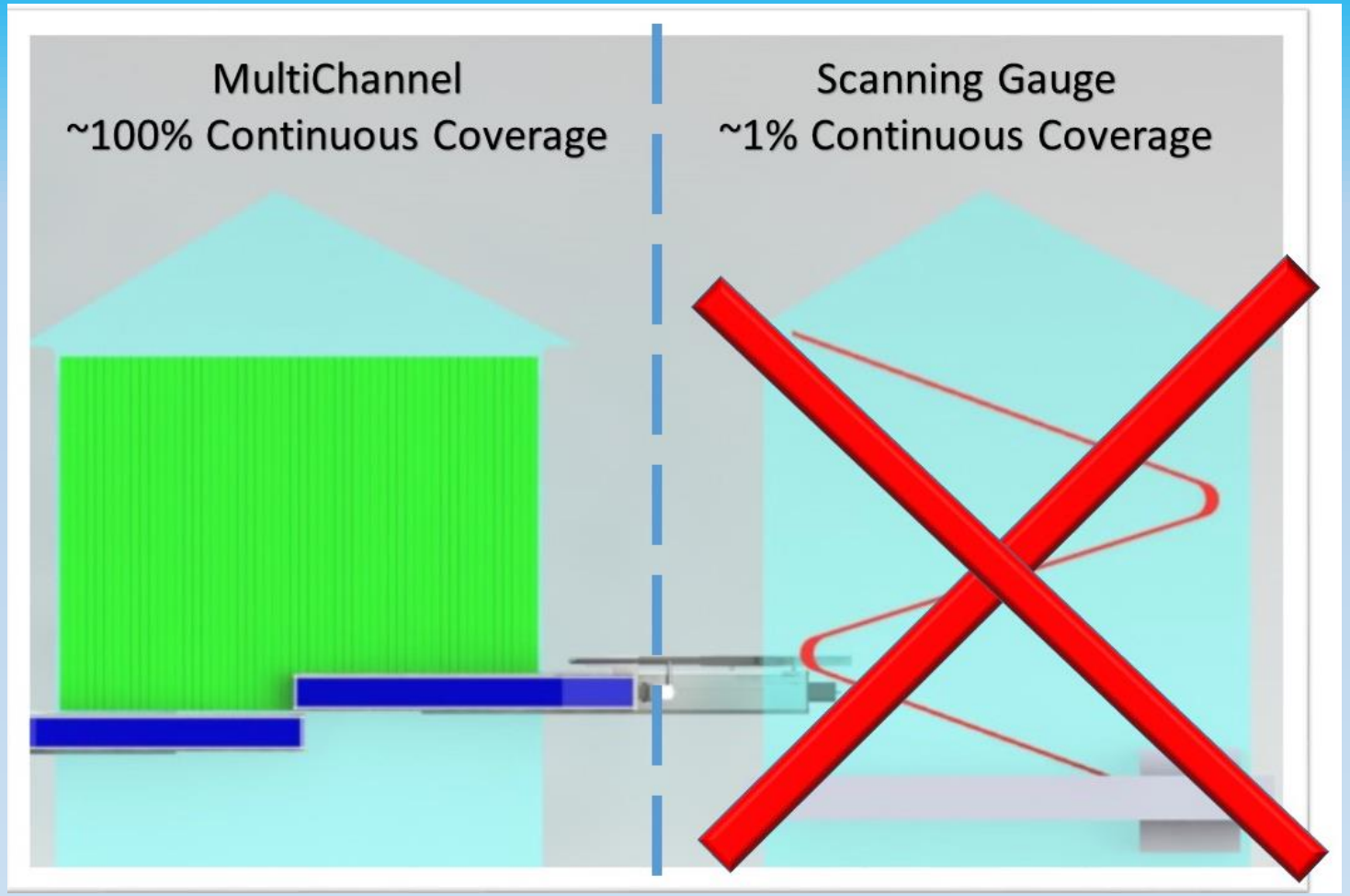

SolveTech INC

Complete Coverage Possible

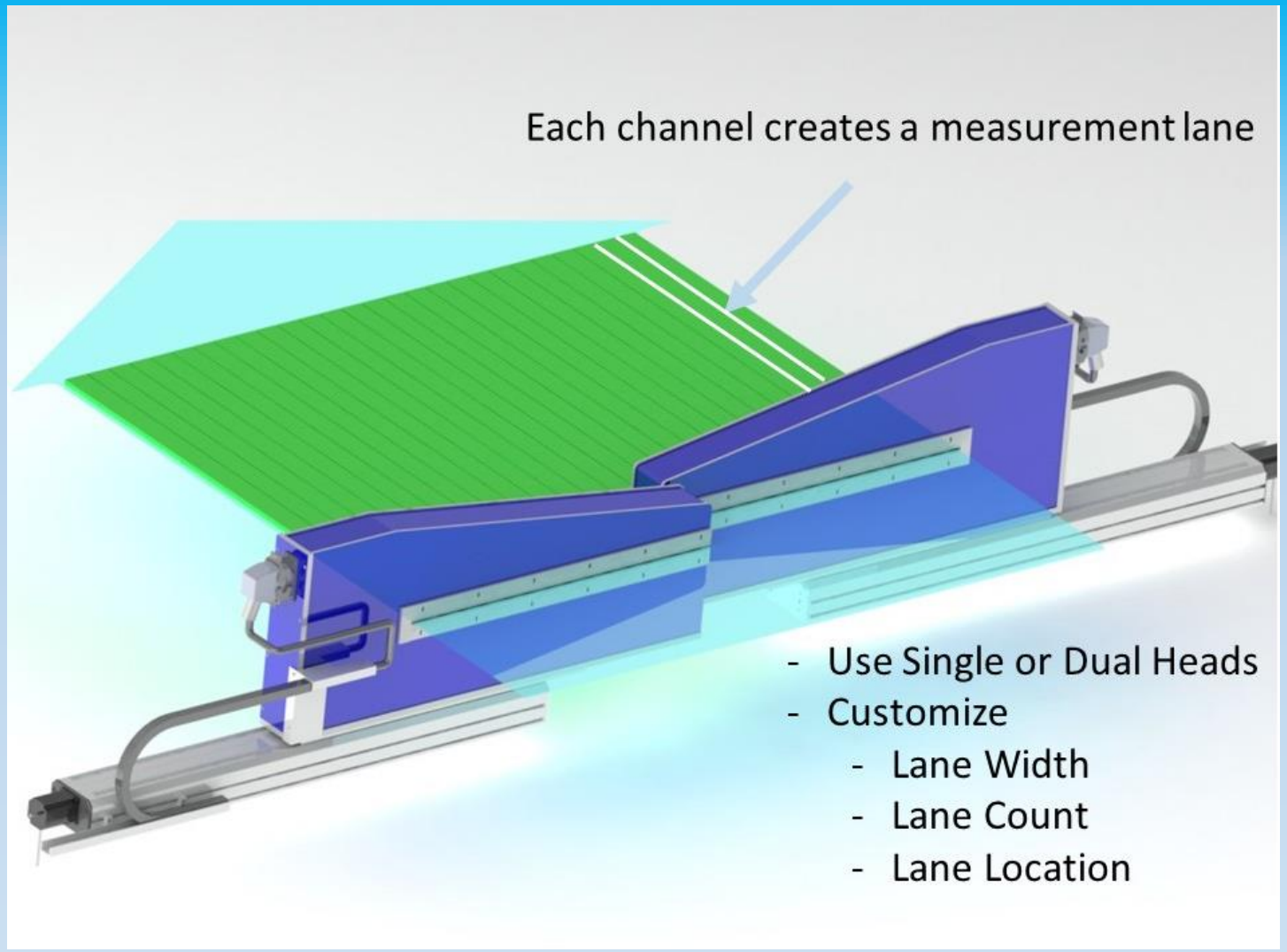

SolveTech INC

Customize Your Gauging Solution

- The channel layouts create measurement lanes.
- The width, location and number of these lanes is customizable
- Get complete coverage or choose your locations
- Use one or two heads

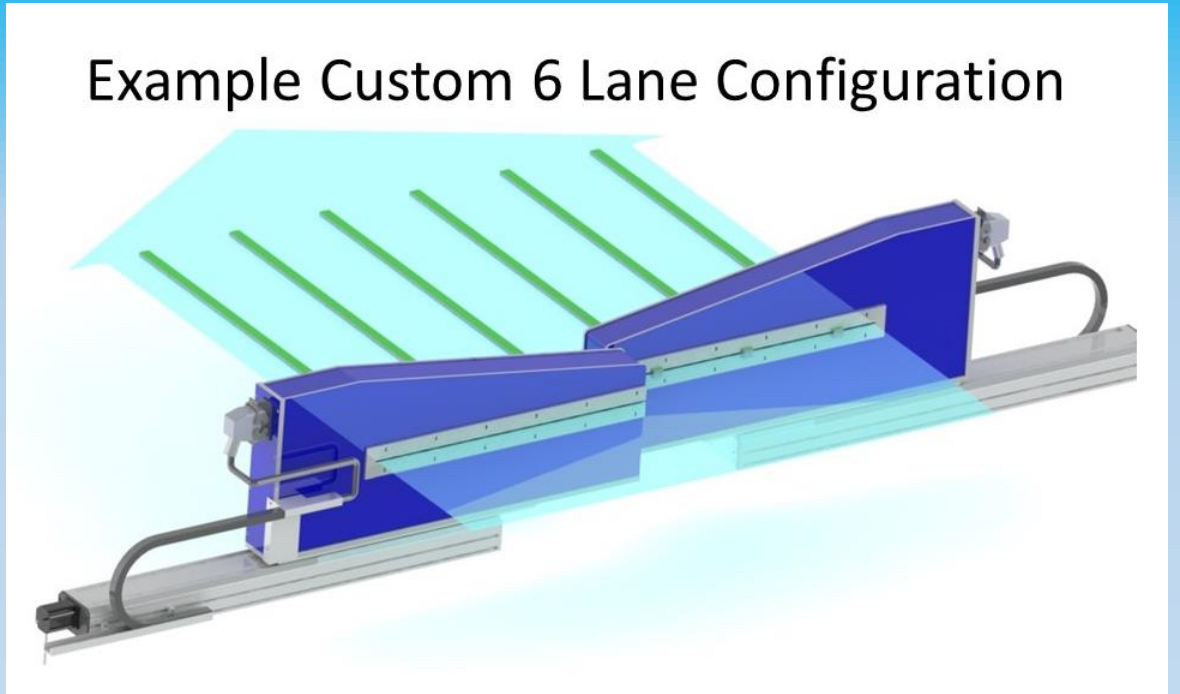

Example- 3 Channel- 3” Wide Channels

SolveTech INC

Example- 24 Channel- 0.5” Wide Channels

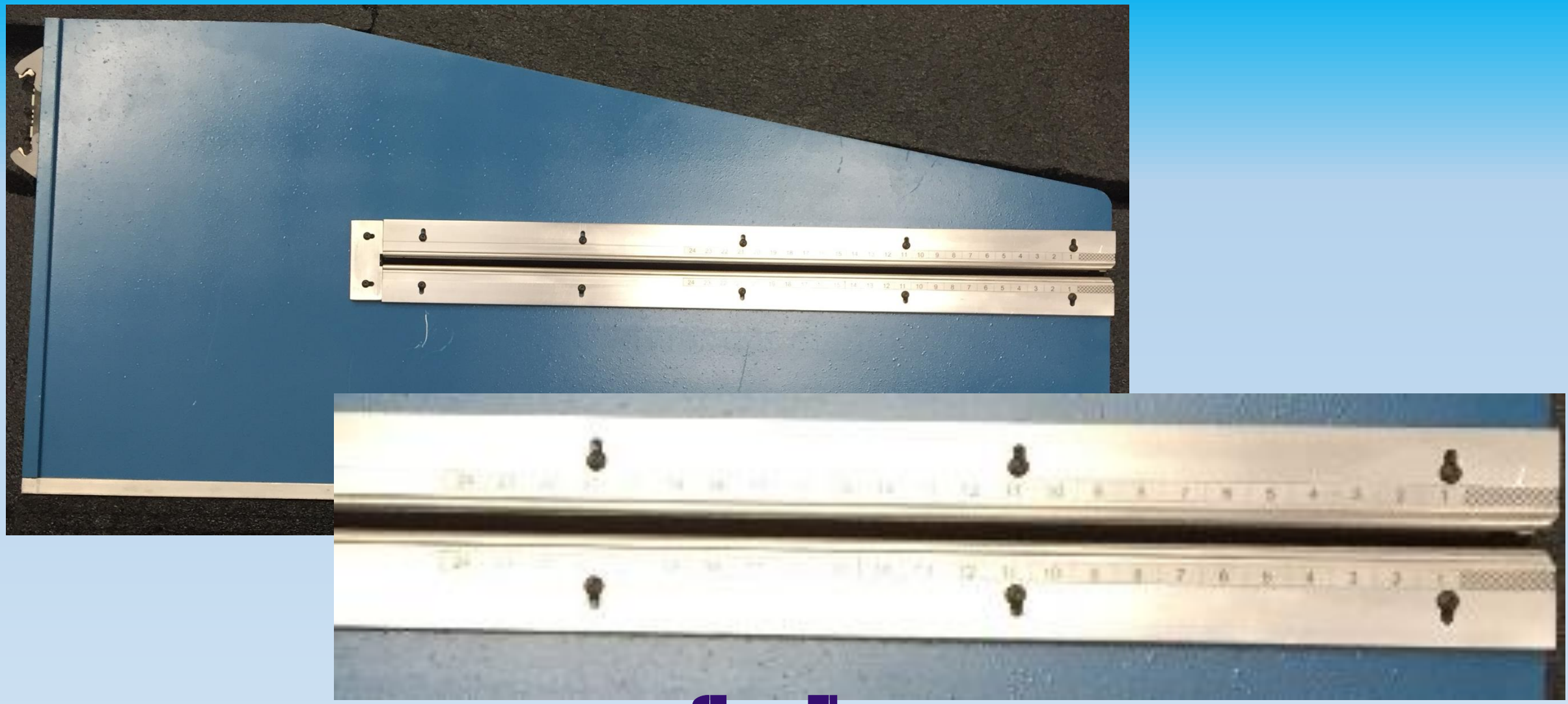

SolveTech INC

Example- 10 Channels, 1” Wide

SolveTech INC

Benefits for a Film Producer

- Allows for monitoring of the film during production
- Create roll reports to send to customers
- Use it to make adjustments to the extruder
- Possible down gauging to save material
- Speed product change over
- Predict maintenance issues and cleaning
- Reduce scrap by finding defects quickly
- Provides traceability

Measure Coatings

- The MC5600 can be used to measure coating thickness using a subtractive measurement.

Coated Substrate- Substrate = Coating Thickness

- Coating thickness can also be measured with one unit if the variation in the substrate is small in comparison to the coating thickness.

What sets the MC5600 Apart?

- The only gauging system with multiple channels 10 mils apart
- No nuclear source or radiation concerns
- Great for narrow webs
- Market Leading Accuracy and Speed
- Great for thin materials
- Non Contact
- Linear- Handles different thicknesses with the same calibration
- Stable

SolveTech Inc

Data Collection

- Create Roll Reports
- 3D Views
- Data can be easily exported to Excel or as a text file
- Autonaming and Autosaving features available
- Security features to protect the data and recipes
- Output to **OPC Server** available

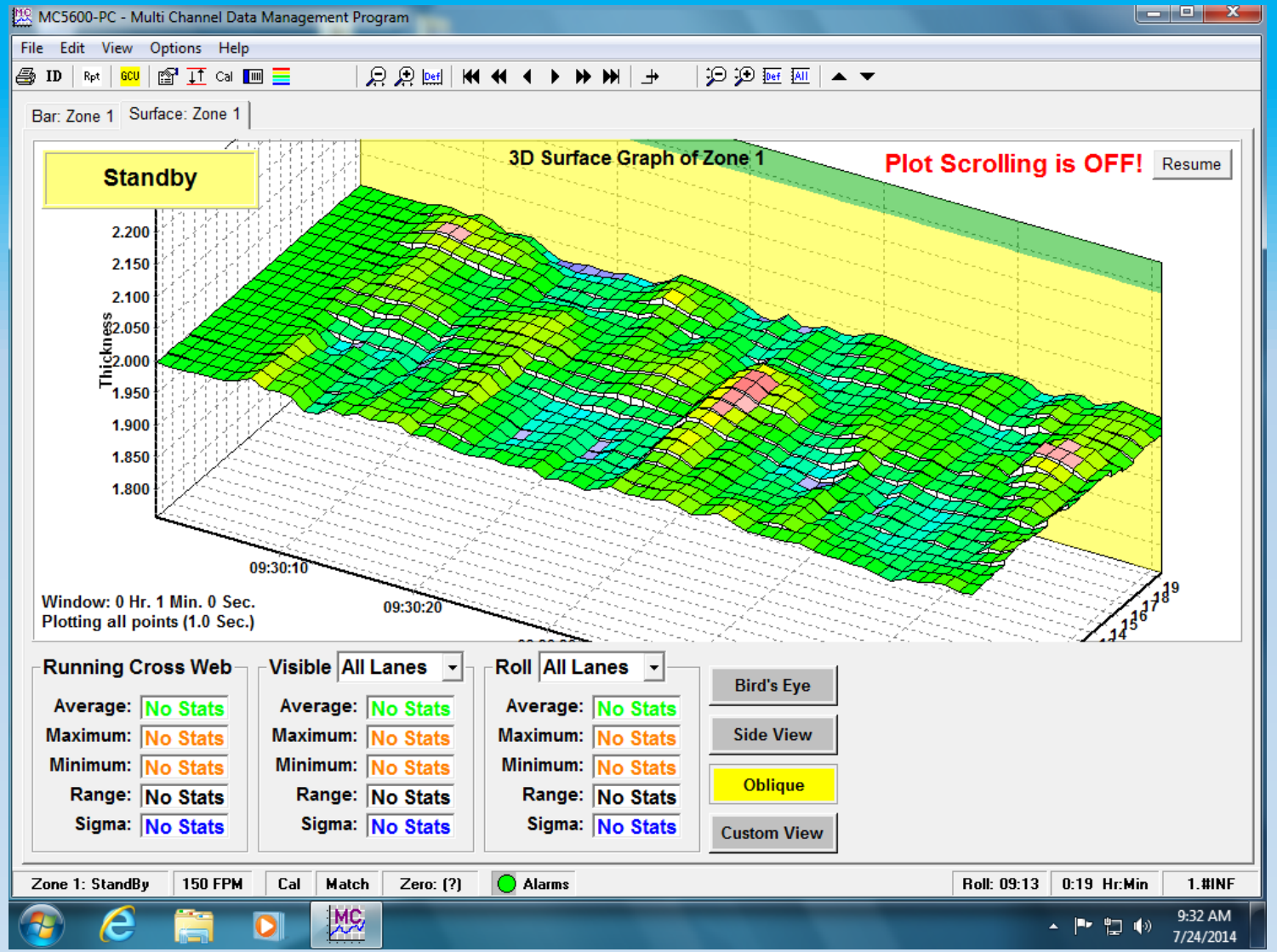

SolveTech INC

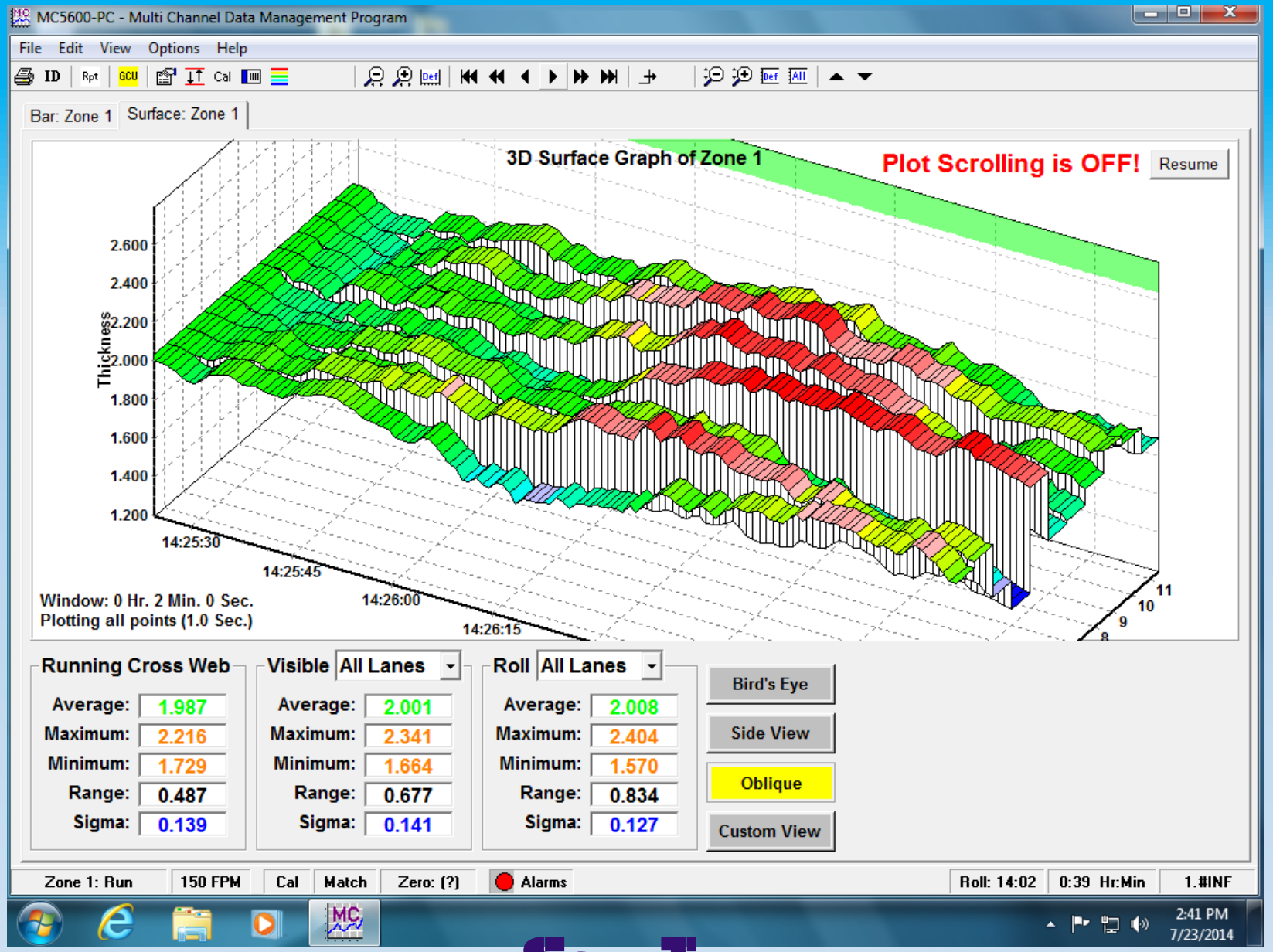

SolveTech INC

Bar Graph View For Adjusting Extruder

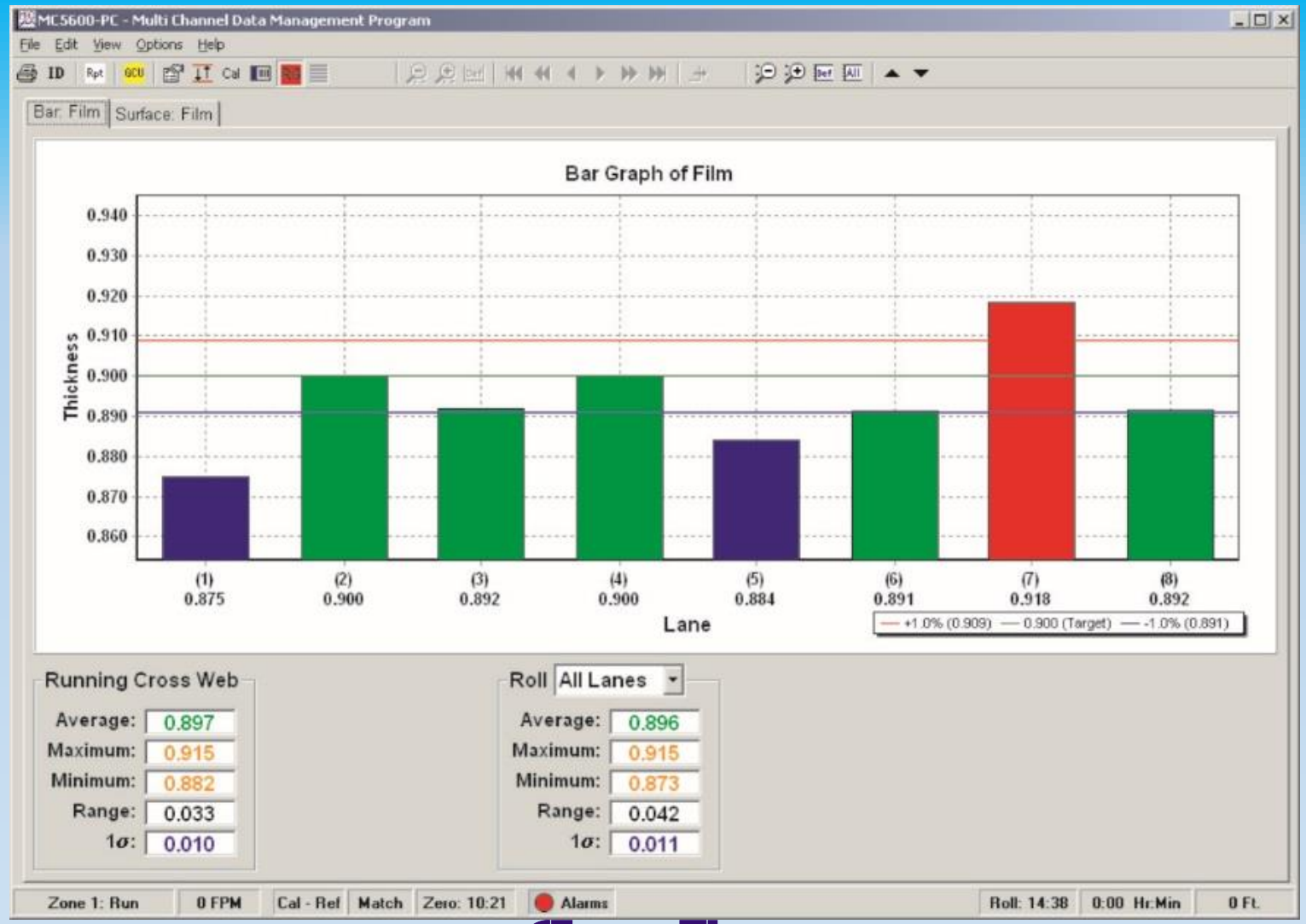

SolveTech INC

System Overview

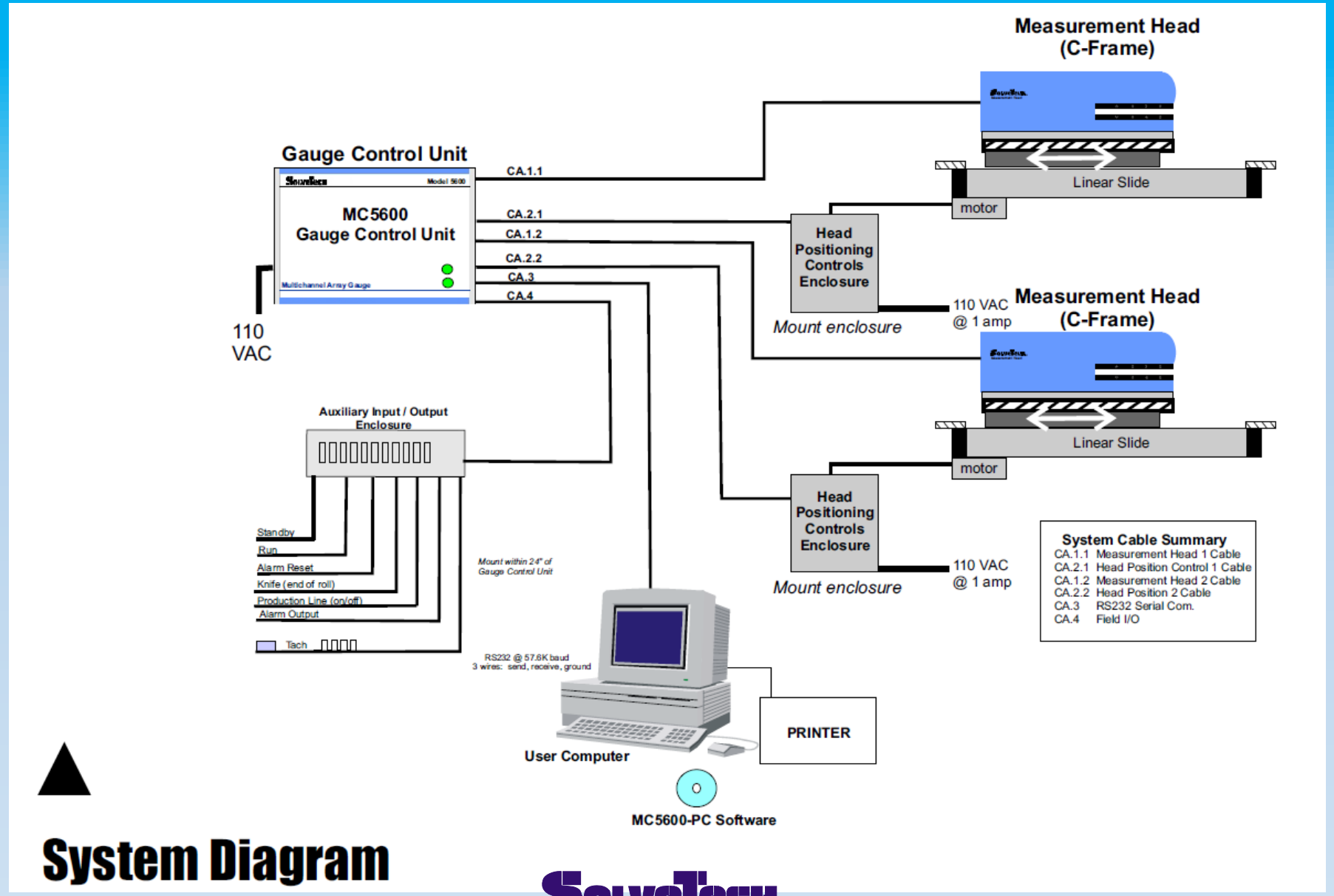

System Diagram

SolveTech INC

Technical Specifications

Category	Technical Spec	Comments
Accuracy	0.01 mil (0.25 Micron)	Typically 1% to 0.1% of material thickness
Material Thickness Range	0.1 to 80 Mils (2.5 to 2032 micron)	Customizable
Voltage	110V 60Hz Standard/220V Available	All international frequencies and voltages available
Typical Channel Size	1 inch in the cross web, 2 inches in the machine direction	Channel size is customizable
Channel Count	2 to 32 Channels	
Data Collection	Every Second	
Travel Distance of the Slide	Exceeds the throat depth on the unit	Other lengths available upon request
Linearity	+/- 0.1%	
Stability	Stable year after year, no recalibration required	

Example Dimensions

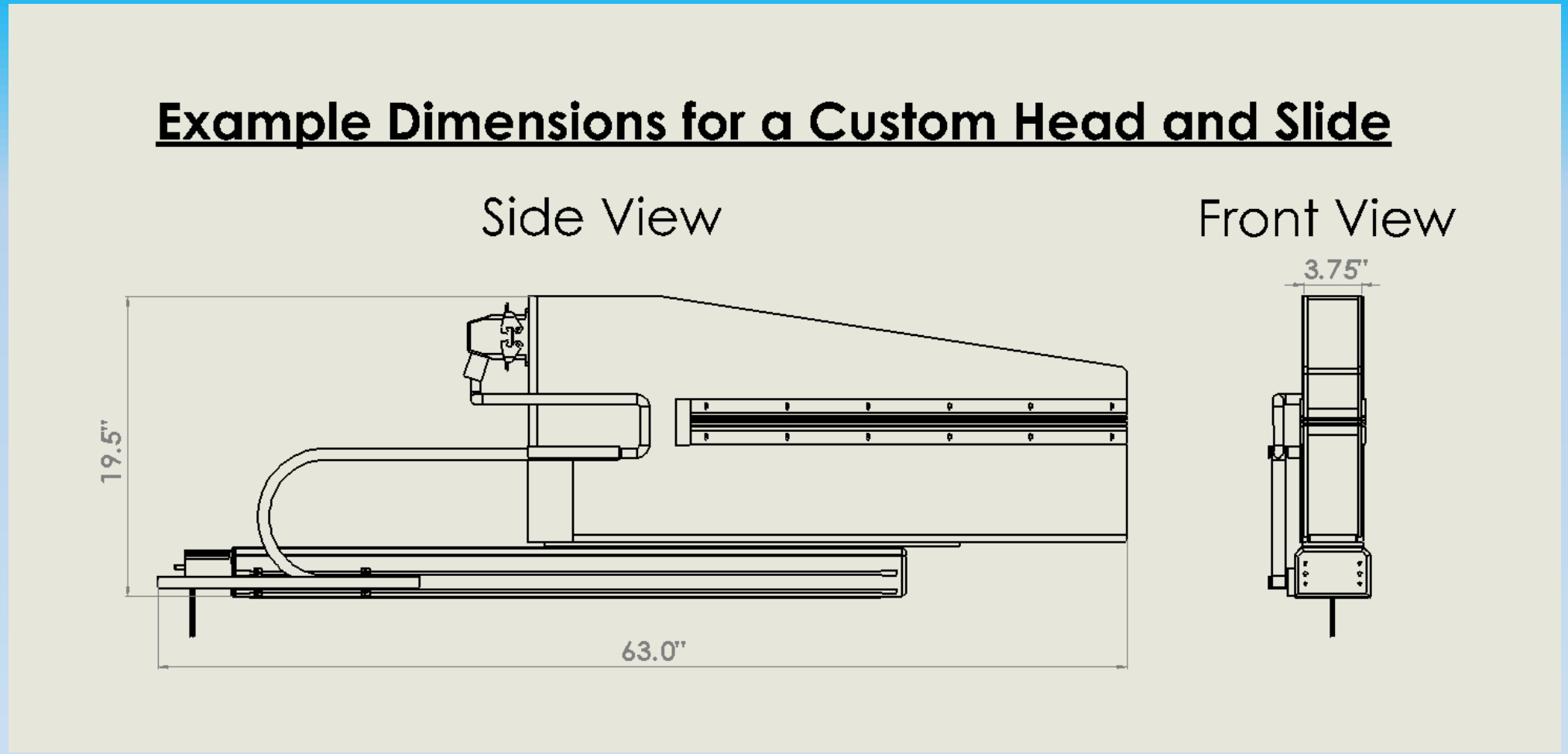

Training and Support

- On site training from our representatives available
- Support and training available through GoToMeeting
- Units have no need for recalibration by the factory

SolveTech INC

Summary

- The MC5600 delivers the only true profile on the market
- Collect cross web and machine direction data simultaneously.
- Great for measuring thin films
- Great tool for quality control, R&D and production
- SolveTech will prove our technology to you through sample testing.

Send us samples today for a free analysis!

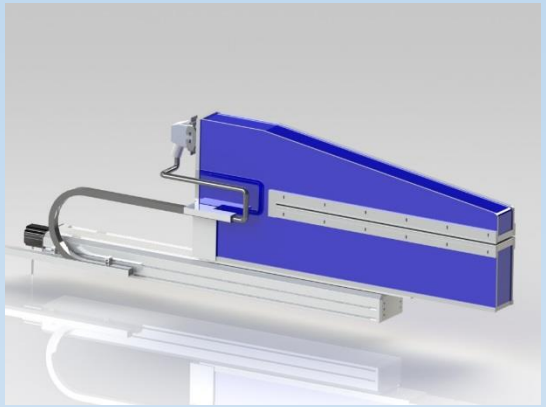

SolveTech INC